NOTES:

1. OPERATING TEMPERATURE: -55°C TO +150°C
2. INPUT VOLTAGE: ±12 TO ±18
3. IA = SENSITIVE (INPUT) AXIS
   OA = OUTPUT (HINGE) AXIS
   PA = PENDULOUS AXIS
4. INPUT CURRENT (QUIESCENT): 8-13 mA
5. WEIGHT (GRAMS): 55 NOM.
6. UNITS: [mm] / Inch

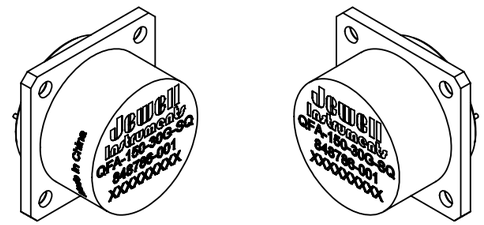

SCALE 1:1

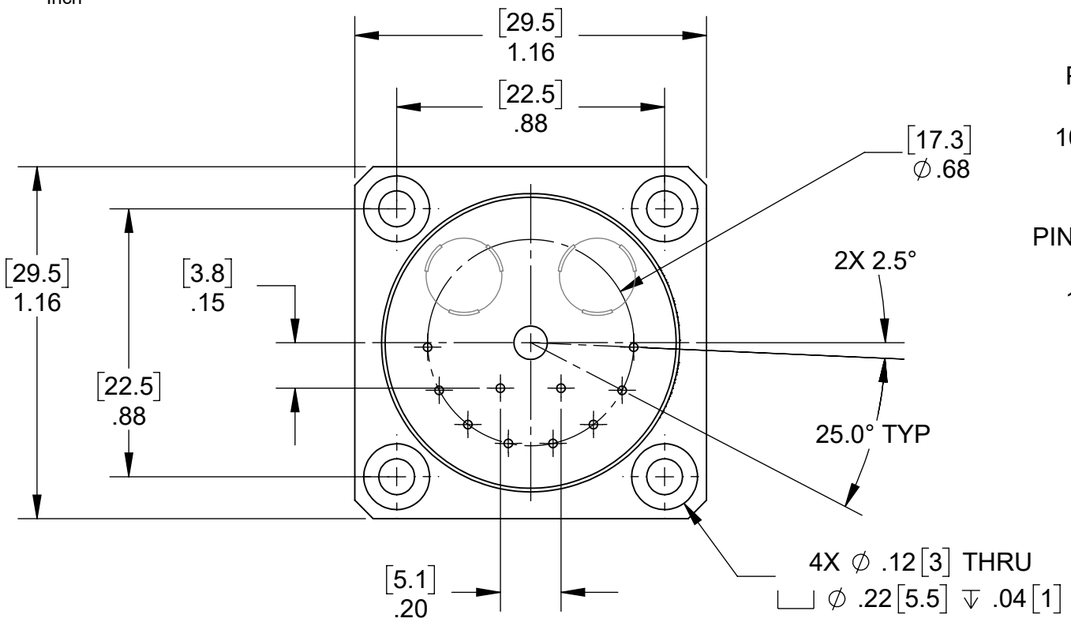

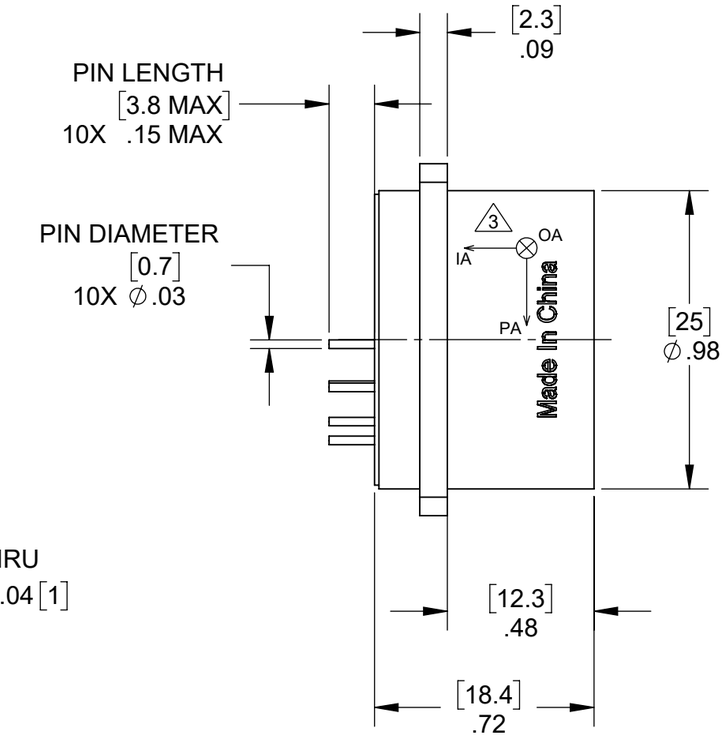

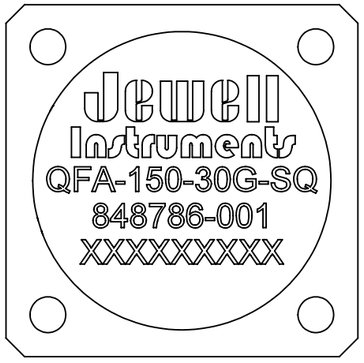

PIN ASSIGNMENT	
PIN	DESCRIPTION
1	CURRENT OUTPUT (SIGNAL OUT)
2	FACTORY USE
3	-15 VDC
4	+15 VDC
5	FACTORY USE
6	TEMPERATURE SENSE OUTPUT (IuA/K)
7	FACTORY USE
8	SIGNAL & POWER RETURN
9	FACTORY USE
10	FACTORY USE

APPLICATION	
USED ON	NEXT ASSY
MATERIAL	NA
FINISH	NA

DIMENSIONS ARE IN INCHES AND APPLY TO PART BEFORE FINISHING

TOLERANCE UNLESS SPECIFIED
TWO PLACE DECIMALS (.00) ± .01
THREE PLACE DECIMALS (.000) ± .005
ANGLES ± 1°
RAW MATL - COMMERCIAL STANDARD

Jewell Instruments
MANCHESTER, NH
TRIPLETT MODUTEC A&M EMICO

PROPRIETARY NOTICE
THIS DRAWING IS THE PROPERTY OF JEWELL INSTRUMENTS, LLC. NEITHER THIS DOCUMENT NOR THE DATA CONTAINED HEREIN SHALL BE DISCLOSED, REPRODUCED IN WHOLE OR IN PART WITHOUT THE WRITTEN AUTHORIZATION OF JEWELL INSTRUMENTS, LLC. NO RIGHT IS GRANTED TO DISCLOSE OR SO USE ANY INFORMATION CONTAINED HEREIN. ALL RIGHTS RESERVED.

TITLE
QFA-150-30G-SQ
OUTLINE DRAWING

DRAWING NO. OD848786-001
REV A

SCALE 2:1
CAGE CODE 33005
SHEET 1 OF 1