Jewell Instruments

MAKING SENSE OUT OF MOTION

# LSBC/LSBP Series Accelerometer

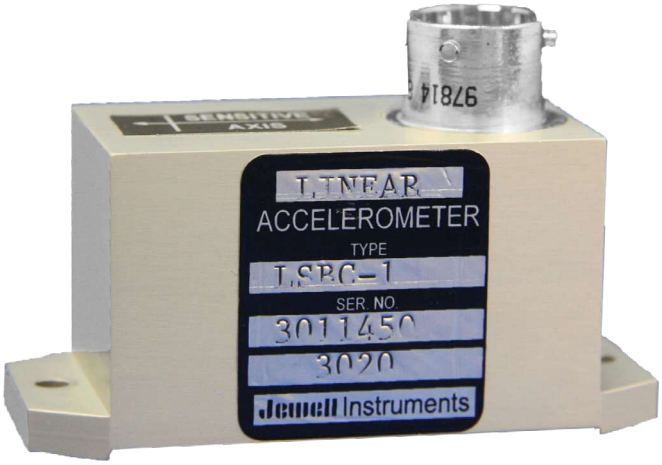


The Jewell LSB Series Accelerometer is a general purpose ±0.5G to ±20G device designed for rail, commercial, and aerospace sensing requirements.

## FEATURES:

- ±0.5g to ±20.0g Full Range
- Bandwidth up to 200 Hz
- Satellite Application Reliability
- Better than 20 µg Res at 10g Full Scale
- Available with 1g Bias Options
- -55°C to +95°C Operating Temp Range
- Standard for Train Control for more than 30 years

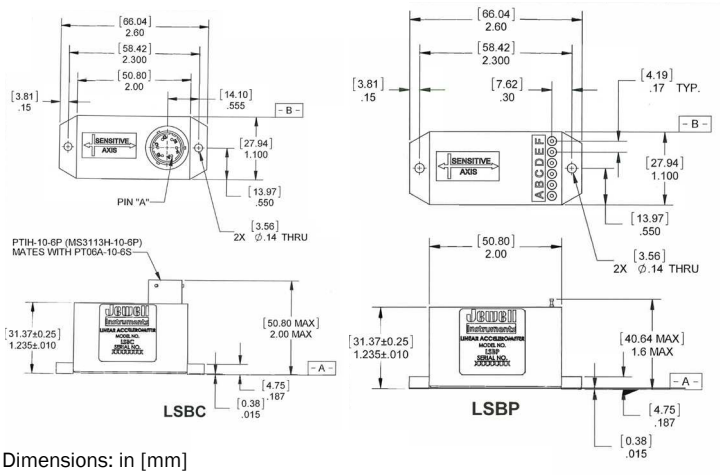


Dimensions: in [mm]

## APPLICATIONS:

- Train Braking & Banking
- Train Performance Testing
- Acceleration Control
- Automotive Performance Testing
- Active Damping
- Rail Car Monitoring
- Lateral Acceleration Sensing
- Tilt Train Controls
- Super-elevation Measurement
- Rail Car Vibration Testing
- Wind shear Detection
- Autopilot
- AHARS
- Wind Turbine Control

## BLOCK:

| | |
|---|---|
| PIN A | +12 to +18 VDC |
| PIN B | Power/Sig Common |
| PIN C | -12 to -18 VDC |
| PIN D | Eo [Volts/g] |
| PIN E | Current Output |
| PIN F | Self-Test |

# PERFORMANCE SPECIFICATIONS

## PERFORMANCE

| INPUT RANGE (g) | ±0.5 | ±1.0 | ±2.0 | ±5.0 | ±10.0 | ±20.0 |
|---|---|---|---|---|---|---|
| FULL RANGE OUTPUT (FRO V± 1.0%) | ±5.0 | | | | | |
| NON LINEARITY (%FRO max) | 0.05 | 0.05 | 0.05 | 0.10 | 0.10 | 0.25 |
| SCALE FACTOR (V/g, nom) | 10.0 | 5.0 | 2.5 | 1.0 | 0.5 | 0.25 |
| SCALE FACTOR TEMP. SENSOR (ppm/°C, max) | 200 | | | | | |
| BIAS (g, max) | 0.050 | 0.010 | 0.010 | 0.010 | 0.020 | 0.050 |
| BIAS TEMPERATURE (µg/°C) | 50 | 50 | 50 | 100 | 100 | 200 |
| NATURAL FREQUENCY (Hz, nom) | 70 | 100 | 140 | 100 | 140 | 160 |
| BANDWIDTH (-3db, Hz, nom) | 70 | 100 | 140 | 100 | 140 | 160 |
| INPUT-AXIS MISALIGNMENT (°max) | ±1.0 | | | | | |
| RESOLUTION & THRESHOLD (µg) | 10 | 10 | 10 | 10 | 20 | 50 |

## ELECTRICAL

| INPUT VOLTAGE RANGE (VDC nom) | ±12 to ±18 | | | | | |
|---|---|---|---|---|---|---|
| INPUT CURRENT (mA, nom) | 10.0 | | | | | |
| OUTPUT IMPEDANCE (Ohms, nom) | 10.0K | 5.0K | 2.5K | 5.0K | 2.5K | 2.5K |
| NOISE (mV, rms max) | 0.005 | | | | | |

## ENVIRONMENTAL

| OPERATING TEMPERATURE RANGE | -55° to +95°C |
|---|---|
| SURVIVAL TEMPERATURE RANGE | -65° to +105°C |
| SHOCK | 100 g - 0.011 sec, $^1/_2$ sine |
| SEAL | MIL-STD 202, Method 112 |

# MATING CONNECTOR AND CABLE ASSEMBLIES

## CONNECTOR CABLE

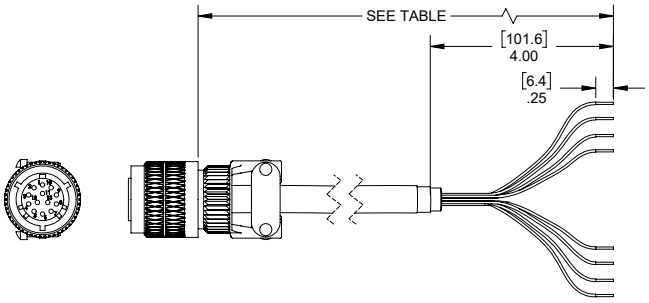


| PART # | MODEL # | LENGTH m (ft) |
|---|---|---|
| 62101011-001 | 6-Pin Mating Connector | - |
| 879605-009 | DSI-CBL-02M-2 | 2 (6.56) |
| 879605-010 | DSI-CBL-03M-2 | 3 (9.84) |
| 879605-0XX | DSI-CBL-05M-2 | 5 (16.4) |
| Contact manufacturer for custom lengths | | |

# ORDERING INFORMATION

## HOW TO ORDER

| | PIN OR CONNECTOR | MODEL # | PART # |
|---|---|---|---|
| ±0.5 | PIN | LSBP-0.5g | 02550275-001 |
| | CONNECTOR | LSBC-0.5g | 02550275-006 |
| ±1.0 | PIN | LSBP-1g | 02550275-002 |
| | CONNECTOR | LSBC-1g | 02550275-007 |
| ±2.0 | PIN | LSBP-2g | 02550275-003 |
| | CONNECTOR | LSBC-2g | 02550275-008 |
| ±5.0 | PIN | LSBP-5g | 02550275-004 |
| | CONNECTOR | LSBC-5g | 02550275-009 |
| ±10.0 | PIN | LSBP-10g | 02550275-005 |
| | CONNECTOR | LSBC-10g | 02550275-010 |
| ±20.0 | PIN | LSBP-20g | 02550275-000 |
| | CONNECTOR | LSBC-20g | 02550275-000 |

850 Perimeter Road Manchester, NH 30103 USA

SENSORS: 800.227.5955 | METERS & AVIONICS: 800.638.3771
www.jewellinstruments.com | sensors@jewellinstruments.com

© Jewell Instruments 2020

Jewell Instruments
ISO9001 CERTIFIED