Jewell Instruments

MAKING SENSE OUT OF MOTION

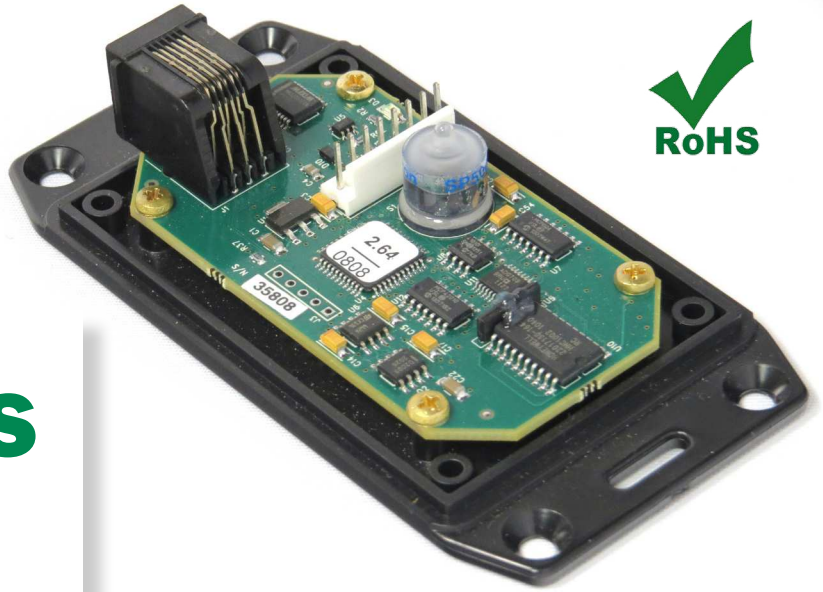

RoHS

ECV eCOMPASS SERIES

3D Electronic Compass

The ECV eCompass Series is a 3D electronic compass providing stable azimuth, pitch, and roll measurements in dynamic conditions. As an enhanced version of our ECG Series, the ECV includes a full suite of precision, 3-axis, MEMS sensors, and an optional dual-axis electrolytic tilt sensor, for the ultimate in near-level accuracy. A high-performance microcontroller orchestrates the fast measurement sequence, sensor calibration adjustments, frame-of-reference translations, trigonometric calculations, and advanced signal processing required to provide accurate heading, pitch, and roll outputs.

FEATURES:

- High Accuracy
- Wide Operating Range
- Precise factory calibration
- Wide Operating range
- RS232 & RS485 output available
- Fast response
- Low power

APPLICATIONS:

- Unmanned vehicles
- Robotics
- Platform Stabilization
- Excavation Machinery
- Marine navigation

(800) 227-5955 • www.jewellinstruments.com • sensors@jewellinstruments.com

PERFORMANCE SPECIFICATIONS

HEADING PERFORMANCE

ACCURACY (rms)	±0.5° Static, Tilt < 35° Dip < 60°
	±3.0° Dynamic, rate < 150°/sec
REPEATABILITY	±0.3°, static, no filter
RESPONSE TIME	36 msec minimum, no filter
DIP ANGLE RANGE	±80°
TILT RANGE	±90° Pitch/±180° Roll
UPDATE RATE	27.5 per second

PITCH & ROLL PERFORMANCE

ACCURACY	±0.3°, factory calibrated
REPEATABILITY	±0.2°, no filter
RANGE (°)	±90° Pitch/±180° Roll; (± 42°) electrolytic tilt only
SETTLING TIME	0.5 seconds, Gyro Enabled

ELECTRICAL

SUPPLY CURRENT	40mA operating, typical
	10mA idle, typical
	5mA standby, typical
SUPPLY VOLTAGE	7-45 VDC unregulated

ENVIRONMENTAL

OPERATING TEMP. RANGE	-40° to +105°C
	-20°C with electrolytic tilt)
STORAGE TEMP. RANGE	-50° to +150°C
HUMIDITY	0 to 90% non-condensing
SHOCK	200g; Max horizontal (with electrolytic tilt)

INTERFACE

SIGNAL TYPE	RS232 or RS485
BAUD RATE	2400, 4800, 9600, 19200, or 38400 Bps
CHARACTER FORMAT	8 data, no parity, 1 stop
INPUT BUFFER SIZE	110 characters
OUTPUT BUFFER SIZE	110 characters
OUTPUT FORMAT	NMEA 0183 and binary
OUTPUT DATA RATE	1 to 1650 sentences/min
OPERATING MODES	Continuous or sample
ANGLE UNITS	Degrees, mils, radians, 16-bit integer

PIN OUTS

RJ-12 JACK

1	GROUND
2	POWER
3	TX
4	RX
5	GROUND
6	100K

8-PIN HEADER

1	UNREGULATED PWR
2	RS232 TX OUT
3	RS232 RX IN
4	REGULATED PWR
5	TTL RX IN
6	GROUND
7	TTL TX OUT
8	TTL RUN/SLEEP IN

INTERFACE BLOCK DIAGRAM

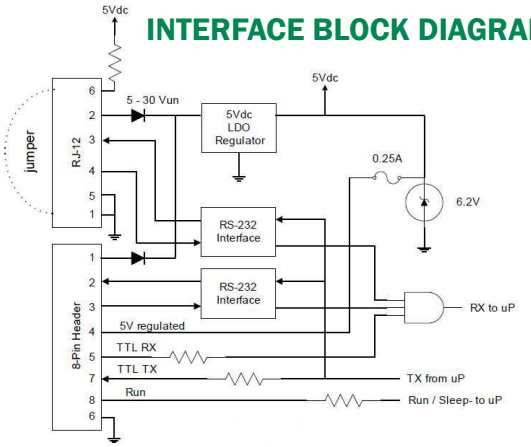

PRODUCT SPECIFICATIONS

MECHANICAL

	PLASTIC ENCLOSURE	ALUMINUM ENCLOSURE
ENCLOSURE DETAILS	(ABS) Flame Retardant UL94 V0	Diecast Aluminum Alloy (Type 360.1)
PCB SIZE	1.6”W x 3.0”L x 0.6”H (H required for tilt sensor)	
PCB MOUNTING	4 #4 screws, 1.4” x 2.2” spacing	
WEIGHT	3.2 oz. (90.7 g)	7.2 oz. (204.1 g)
CONNECTOR	6 pin RJ12 modular jack	8 pin, single-row 0.1” friction header

DIMENSIONS OF PLASTIC ENCLOSURE

Dimensions: in [mm]

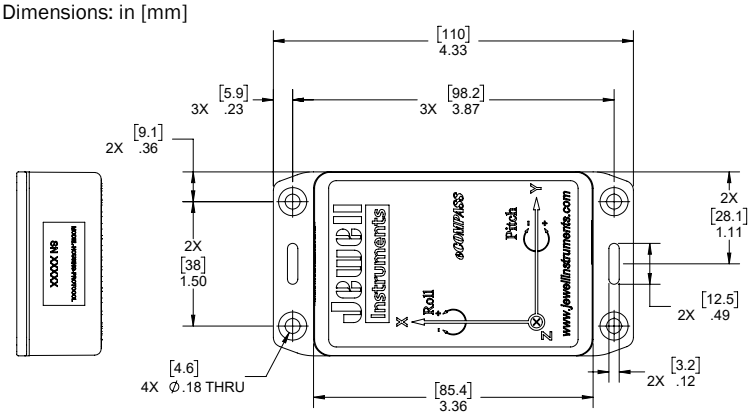

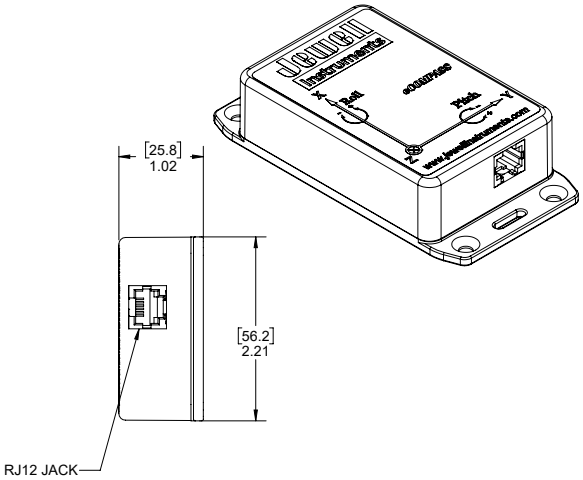

DIMENSIONS OF ALUMINUM ENCLOSURE

Dimensions: in [mm]

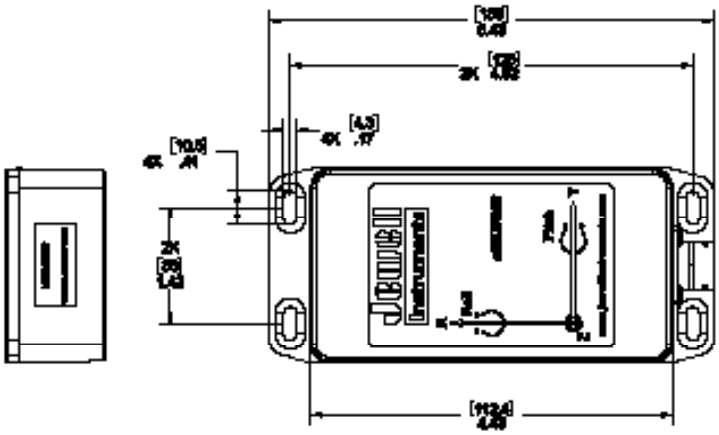

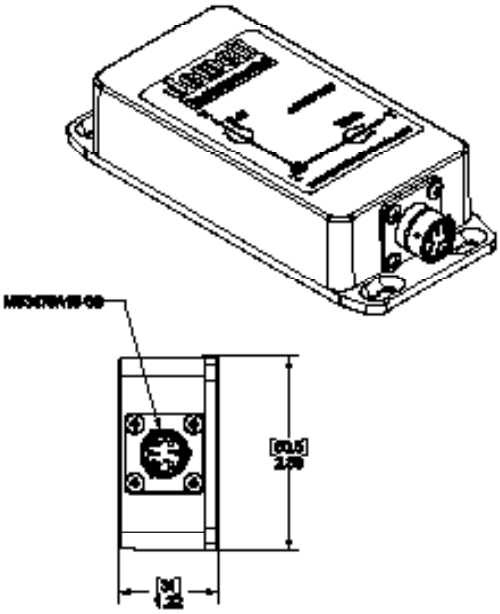

PRODUCT SPECIFICATIONS

RS-232 WIRING

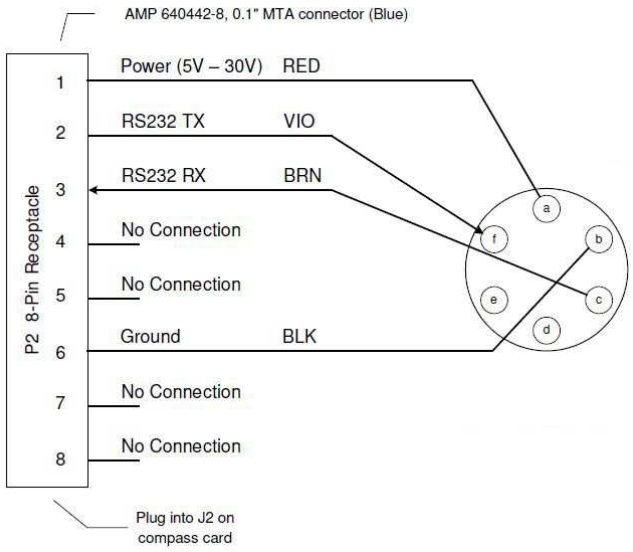

RS-485 WIRING

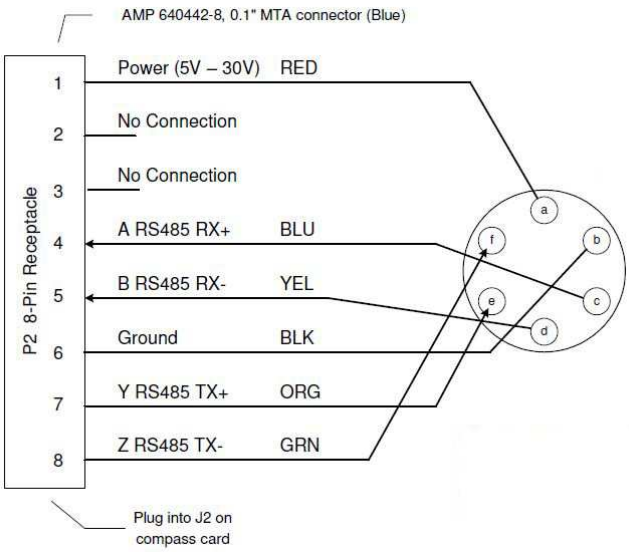

ORDERING INFORMATION

HOW TO ORDER

	ENCLOSURE	MODEL #	PART #
RS232	PLASTIC	ECV-P/J-RS232-ROHS	02550403-ECV-001-ROHS
	ALUMINUM	ECV-A/C-RS232-ROHS	02550403-ECV-002-ROHS
RS485	ALUMINUM	ECV-A/C-RS485-ROHS	02550403-ECV-003-ROHS

850 Perimeter Road Manchester, NH 30103 USA

SENSORS: 800.227.5955 | METERS & AVIONICS: 800.638.3771
www.jewellinstruments.com | sensors@jewellinstruments.com

© Jewell Instruments 2020

Jewell Instruments
ISO9001 CERTIFIED