Model A802 DeepWater Analog Tiltmeter

The model A802 Deepwater is a high-precision submersible tiltmeter for use in marine, offshore, and deep ocean applications. Using an absolute gravity referenced electrolytic sensor, the A802 delivers superior measurement accuracy with virtually no long-term drift. High-gain units are sensitive to <0.0017 mm/m or better. Output is a stable ±5 DC voltage (±10 VDC differential), which can be read with any VDC input data recorder. All units are rated to +2500m waterproof for advanced protection from the elements. Use the A802 "Deepwater" for structural monitoring, angle measurement and control, platform leveling, and more.

	High-Gain	Standard	Wide-Angle
Angular Range	±0.5°	±3.0°	±50°
Resolution	<0.0001°	0.0006°	0.01°
Repeatability	<0.0002°	0.001°	0.02°
Non-Linearity	1%	<2%	0.5%
Scale Factor	0.1°/V	0.6°/V	10°/V
Time Constant	1.75 sec (2-pole Butterworth low-pass filter)		0.15 sec
Kz Temp Coefficient (deg/C)	±0.0002 arcsec/°C (typical)		±0.002 arcsec/°C (typical)
Ks Temp Coefficient (%/°C)	0.02%/°C (typical)		
Output	±5VDC (single ended); ±10VDC (differential)		
Channels	Tilt, Temperature		
Output Impedance	270 ohms		
Temperature Output	0.1°C/mV typical (single ended; 0°C = 0mV)		
Power	8-18 VDC @ 8mA, 250 mV ripple max, reverse polarity protected		
Environmental	-4 to +60° C operation; -30 to +100° C storage. IP68		
Dimensions	120 x 80 x 60 mm, 5 kg (11 lb.)		
Materials	316 SS (6AL-4V Titanium also available)		
Cable	6-conductors, two-types available: 1) Neoprene, 20 AWG, no shield or 2) PVC-jacketed, polypropylene-insulation, 24 AWG, shielded. Order cable separately.		

Specifications subject to change without notice on account of continued product development

Ordering Code:

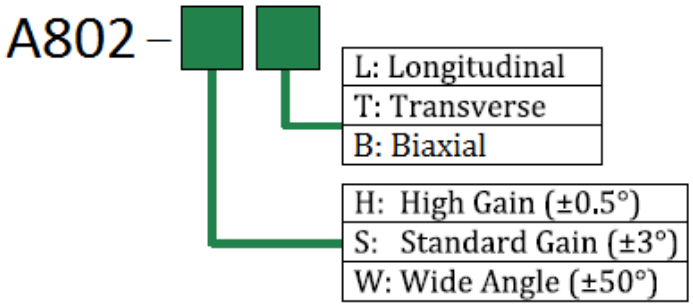

Wiring/Pin-out:

Pin	Wire Color	Function
1	Black	Power Ground
2	White	Signal Ground
3	Red	V+
4	Green	+Tilt
5	Yellow	Temperature
6	Blue	-Tilt (differential)

Jewell Instruments LLC 850 Perimeter Road, Manchester, NH 03103
sales@jewellinstruments.com • www.jewellinstruments.com • Tel (800) 227-5955

Dimensions & Axis Configurations:

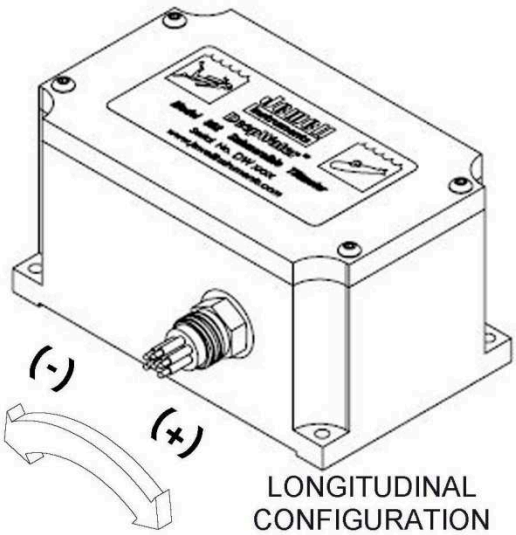

LONGITUDINAL CONFIGURATION

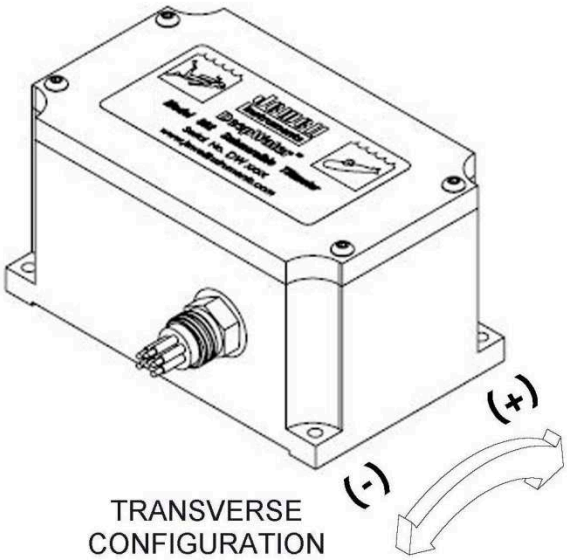

TRANSVERSE CONFIGURATION

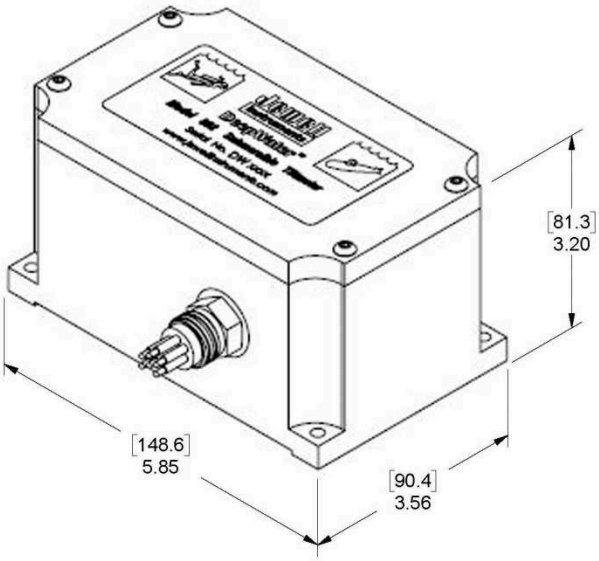

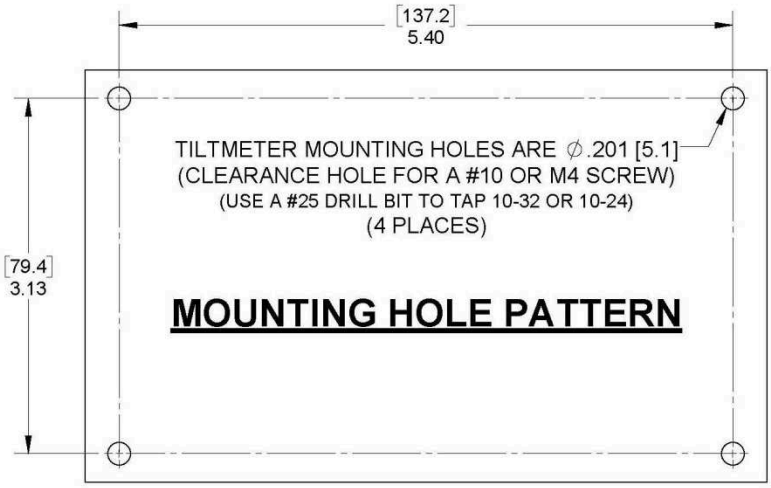

DIMENSIONS ARE IN INCHES [MILLIMETERS]